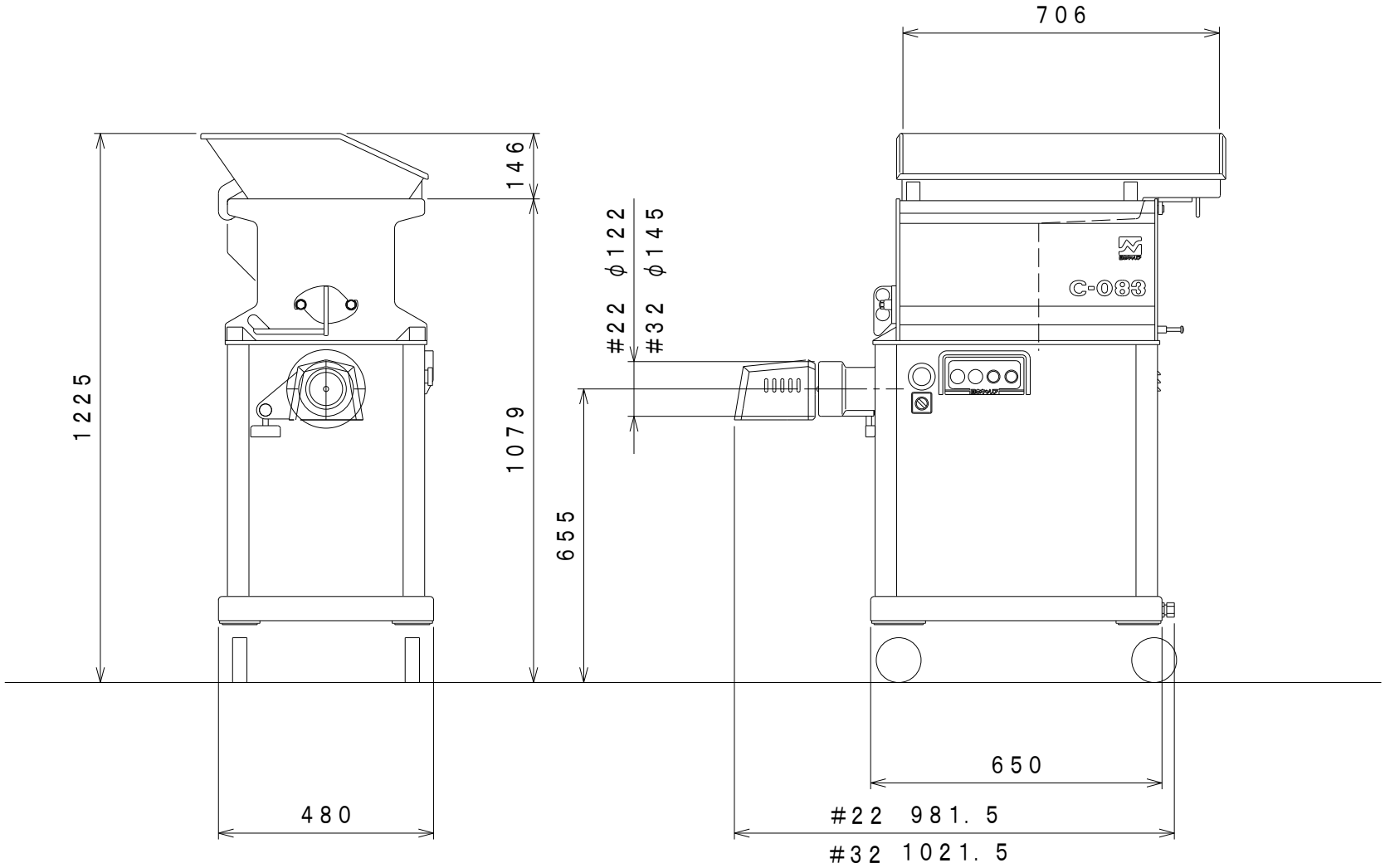
706
146
1225
1079
655
#22 φ122
#32 φ145
C-083
480
650
#22 981.5
#32 1021.5

(C−083)